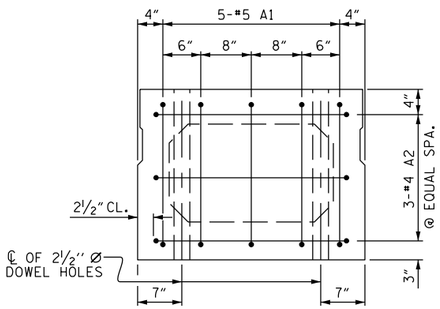

END ELEVATION

SHOWING PLACEMENT OF #5 & #4 "A" BARS AND LOCATION OF DOWEL HOLES. (INTERIOR BOX BEAM SECTION SHOWN-EXTERIOR SECTION SIMILAR EXCEPT SHEAR KEY LOCATION. STRAND LAYOUT NOT SHOWN.)

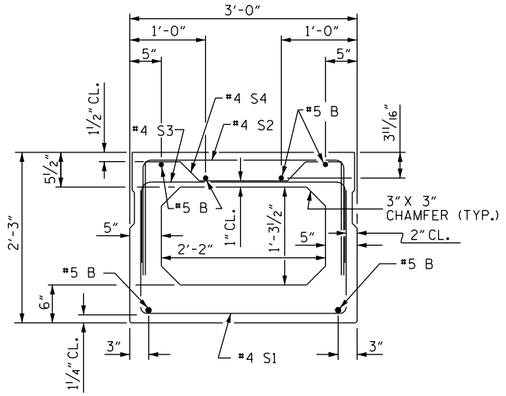

INTERIOR BOX BEAM SECTION

(STRAND LAYOUT NOT SHOWN)

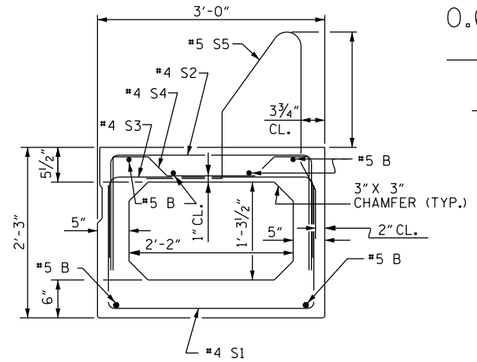

EXTERIOR BOX BEAM SECTION

(STRAND LAYOUT NOT SHOWN)

0.6" Ø LOW RELAXATION STRAND LAYOUT

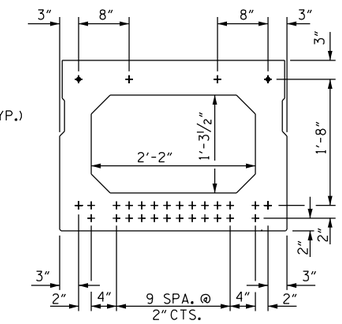

TYPICAL STRAND LOCATION

(__ STRANDS REQUIRED)

(INTERIOR BOX BEAM SECTION SHOWN-EXTERIOR SECTION SIMILAR EXCEPT SHEAR KEY LOCATION)

DEBONDING LEGEND

● FULLY BONDED STRANDS

BAR TYPES

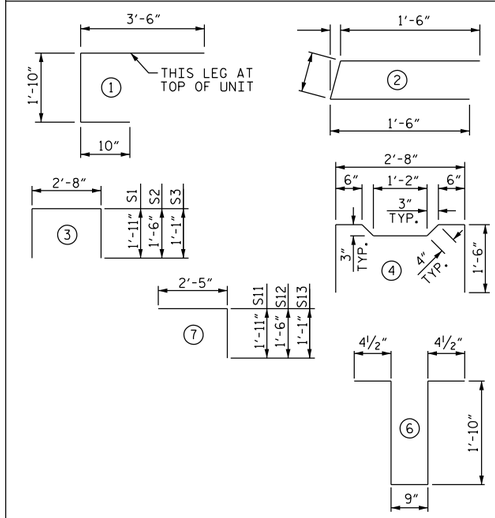

ALL BAR DIMENSIONS ARE OUT TO OUT

BILL OF MATERIAL FOR ONE BOX BEAM SECTION

				EXTERIOR UNIT		INTERIOR UNIT	
BAR	NUMBER	SIZE	TYPE	LENGTH	WEIGHT	LENGTH	WEIGHT
A1	10	#5	1	6'-2"	64	6'-2"	64
A2		#4	2				
B		#5	STR				
K1		#4	6	5'-2"		5'-2"	
K2		#4	STR				
S1		#4	3	6'-6"		6'-6"	
S2		#4	3	5'-8"		5'-8"	
S3		#4	3	4'-10"		4'-10"	
S4		#4	4	5'-10"		5'-10"	
S11		#4	7	4'-4"		4'-4"	
S12		#4	7	3'-11"		3'-11"	
S13		#4	7	3'-6"		3'-6"	
✱ S5		#5	5			--	--
REINFORCING STEEL					LBS.		LBS.
✱ EPOXY COATED REINF. STEEL					LBS.		
--- P.S.I. CONCRETE					CU. YDS.		CU. YDS.
0.6" Ø L.R. STRANDS					No.	No.	

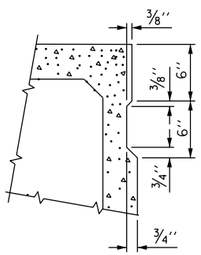

SHEAR KEY DETAIL

NOTE: OMIT SHEAR KEY ON OUTSIDE FACE OF EXTERIOR BOX BEAMS.

END VIEW

(SHOWING #4 "S" BARS IN END OF BEAM)

CHAMFER DETAIL

SHOWING 6" VOID CHAMFER

DETAIL "B"

EXTERIOR UNIT SHOWN, INTERIOR UNIT SIMILAR EXCEPT OMIT #5 S5 BARS. "B" BARS AND "A" BARS NOT SHOWN.

PERMITTED THREADED INSERT CAST IN OUTSIDE FACE OF EXTERIOR UNIT AND RECESSED ⅜". SIZE TO BE DETERMINED BY CONTRACTOR.

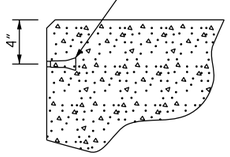

THREADED INSERT DETAIL

PROJECT NO. _____

_____ COUNTY

STATION: _____

SHEET _ OF _

STATE OF NORTH CAROLINA
DEPARTMENT OF TRANSPORTATION
RALEIGH

STANDARD

3'-0" X 2'-3" PRESTRESSED CONCRETE BOX BEAM UNIT SPAN "_"

ASSEMBLED BY :	DATE :
CHECKED BY :	DATE :

DRAWN BY : TLA 5/05	REV. 5/1/06R	TLA/GM
CHECKED BY : GM 6/05	REV. 10/1/11	MAA/GM
	REV. 1/15	RWW/TMG

DOCUMENT NOT CONSIDERED FINAL UNLESS ALL SIGNATURES COMPLETED

REVISIONS						SHEET NO.
NO.	BY:	DATE:	NO.	BY:	DATE:	
1			3			TOTAL SHEETS
2			4			

STD. NO. PCBB2